● Ball screw specifications

Shaft diameter (mm) - Lead (mm)	20 - 10		
Number of circuits / Thread direction	2.5 turns 1 circuit / Right-hand		
Ball diameter (mm)	4.7625		
Root diameter (mm)	16.0		
Series	GG		GE
Basic dynamic load rating C (N)	13500		
Basic static load rating C0 (N)	25100		
Accuracy grade / Axial clearance symbol	C5 / S	C5 / F	C7 / M
Axial clearance (mm)	0	0.005 or less	0.030 or less
Preload torque (N·cm)	7.0 to 29.0	Up to 4.0	----
Spacer ball	None		
Recirculation system	Tube method		
Wiper	Lip seal		
Lubricant	Alvania Grease S2		

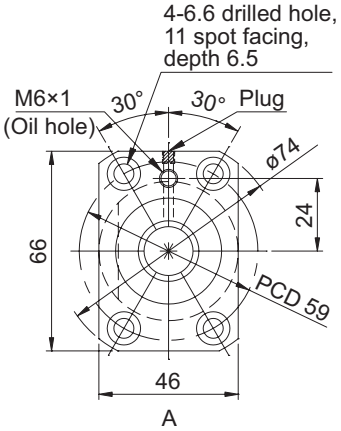

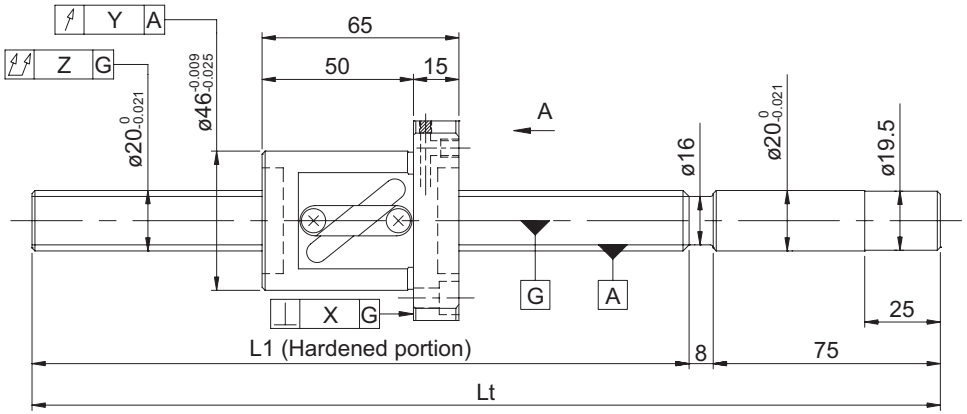

Model No. (Unfinished shaft ends)	Screw shaft length L1	Screw shaft length Lt	Maximum stroke (L1 - nut length)	Lead accuracy ±E_c	Lead accuracy e_c	Lead accuracy e_{300}
GG2010DS-BALR-0605A	522	605	457	0.030	0.023	0.018
GG2010DS-BALR-1005A	922	1005	857	0.040	0.027	
GG2010DS-BALR-1505A	1422	1505	1357	0.054	0.035	
GE2010DS-BALR-0605A	522	605	457	0.05/300	----	----
GE2010DS-BALR-1005A	922	1005	857			
GE2010DS-BALR-1505A	1422	1505	1357			

- **Product with axial clearance of 0.005 or less (F) shown may be partially preloaded.**
- **Preload torque is a value before applying grease.**

● Shaft end finish type

Standard precision ball screws are available with KURODA's recommended shaft end finish types for each size.

Other than KURODA's recommended shaft end finish types described below, additional machining including keyways, tapped holes, and D-cut processing are also available if requested. Please contact KURODA with your orders. Model examples for finished shaft ends are described below.

Model example: Unfinished shaft ends (See left figure) → Finished shaft ends

GG2010DS-BALR-1505A → GG2010DS-BALR-1505X1410-C5F

1505: Overall screw shaft length; 1410: Thread length

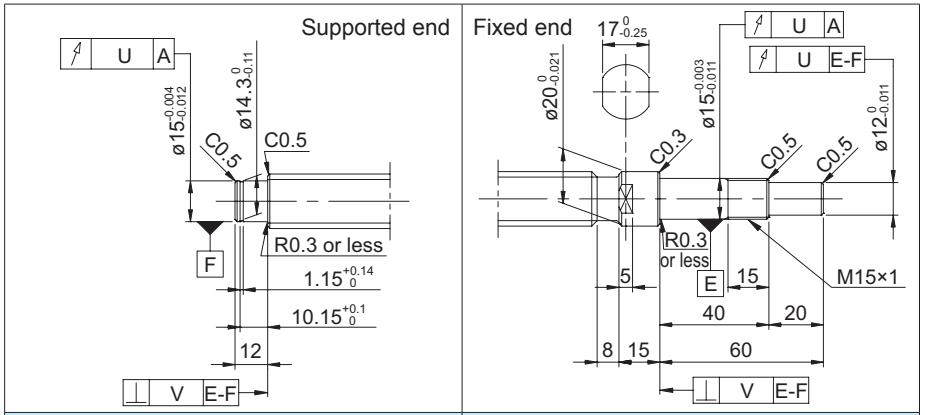

Applicable supported end support unit	Applicable fixed end support unit
BUK-15S (Square type)	BUK-15, BUK-15F (Square type)
BUM-15S (Round type)	BUM-15, BUM-15F (Round type)

● Optional specifications

- Ball screw lubricating unit LUBSEAL can be equipped.

Model example: GG2010DS-BASR-1505X1410-C5F

S: Wiper material S: LUBSEAL

- Anticorrosive black coating (coating thickness: 1 to 2 μm) is available.

Accuracy of each part X	Y	Z	U	V	Preload torque (N·cm) Without clearance	With clearance	Mass (kg)
0.011	0.015	0.075	0.012	0.005	8.0 to 29.0	Up to 4.0	2.01
		0.150			7.0 to 29.0		2.84
		0.190					3.87
0.018	0.030	0.110	----	----	----	----	2.01
		0.210					2.84
		0.270					3.87

- **At the time of delivery, grease is inserted inside of the nut, with rust-preventive oil also applied. Before and during use, apply lubricant where appropriate.**
- **For models with lead accuracy grade of C3 or higher and unfinished shaft ends, consult KURODA.**