● Ball screw specifications

Shaft diameter (mm) - Lead (mm)	15 - 20		
Number of circuits / Thread direction	1.5 turns 1 circuit / Right-hand		
Ball diameter (mm)	3.175		
Root diameter (mm)	12.5		
Series	GG		GE
Basic dynamic load rating C (N)	4400		
Basic static load rating C0 (N)	7900		
Accuracy grade / Axial clearance symbol	C5 / S	C5 / F	C7 / M
Axial clearance (mm)	0	0.005 or less	0.030 or less
Preload torque (N·cm)	1.0 to 11.0	Up to 3.0	----
Spacer ball	None		
Recirculation system	Tube method		
Wiper	Lip seal		
Lubricant	Alvania Grease S2		

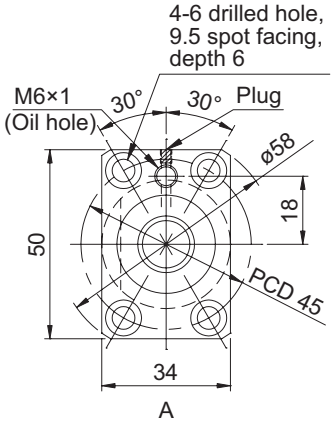

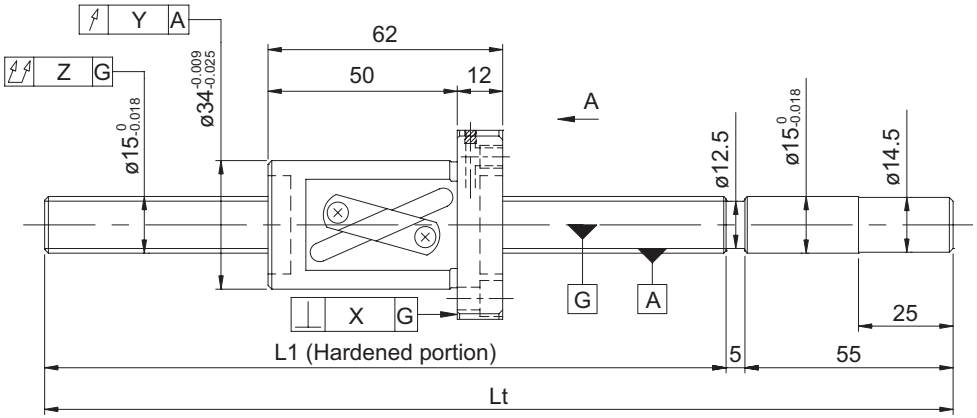

Model No. (Unfinished shaft ends)	Screw shaft length		Maximum stroke (L1 - nut length)	Lead accuracy		
	L1	Lt		$\pm E_c$	e_c	e_{300}
GG1520AS-BALR-0600A	540	600	478	0.030	0.023	0.018
GG1520AS-BALR-0900A	840	900	778	0.040	0.027	
GG1520AS-BALR-1100A	1040	1100	978	0.046	0.030	
GE1520AS-BALR-0600A	540	600	478	0.05/300	----	----
GE1520AS-BALR-0900A	840	900	778			
GE1520AS-BALR-1100A	1040	1100	978			

• Product with axial clearance of 0.005 or less (F) shown may be partially preloaded.
• Preload torque is a value before applying grease.

● Shaft end finish type

Standard precision ball screws are available with KURODA's recommended shaft end finish types for each size.

Other than KURODA's recommended shaft end finish types described below, additional machining including keyways, tapped holes, and D-cut processing are also available if requested. Please contact KURODA with your orders. Model examples for finished shaft ends are described below.

Model example: Unfinished shaft ends (See left figure) → Finished shaft ends

GG1520AS-BALR-1100A → GG1520AS-BALR-1100X1028-C5F
└→Thread length
└→Overall screw shaft length

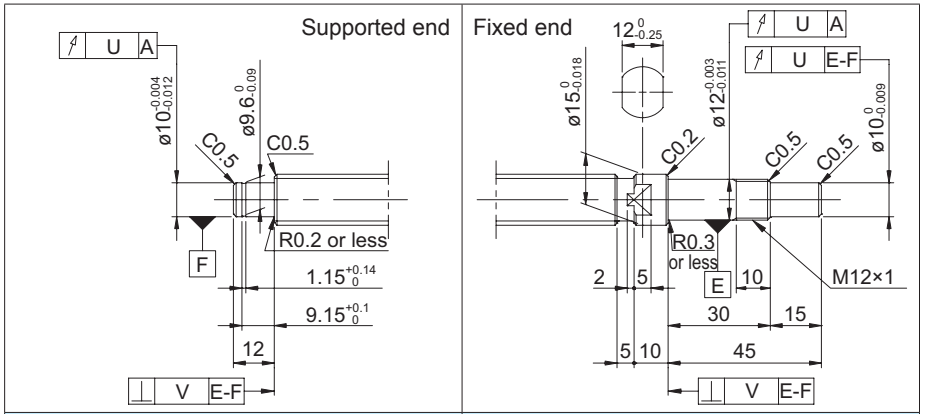

Applicable supported end support unit	Applicable fixed end support unit
BUK-10S (Square type)	BUK-12, BUK-12F (Square type)
BUM-10S (Round type)	BUM-12, BUM-12F (Round type)

● Optional specifications

• Ball screw lubricating unit LUBSEAL can be equipped.

Model example: GG1520AS-BASR-1100X1028-C5F
└→Wiper material S: LUBSEAL

• Anticorrosive black coating (coating thickness: 1 to 2 μm) is available.

Accuracy of each part					Preload torque (N·cm)		Mass (kg)
X	Y	Z	U	V	Without clearance	With clearance	
0.011	0.015	0.075	0.012	0.005	1.0 to 10.0	Up to 3.0	1.18
		0.120					1.58
		0.150			1.0 to 11.0		1.85
0.018	0.030	0.110	----	----	----	----	1.18
		0.170					1.58
		0.210					1.85

• At the time of delivery, grease is inserted inside of the nut, with rust-preventive oil also applied. Before and during use, apply lubricant where appropriate.
• For models with lead accuracy grade of C3 or higher and unfinished shaft ends, consult KURODA.