GG series (Accuracy grade C5) / GE series (Accuracy grade C7)

● Ball screw specifications

Shaft diameter (mm) - Lead (mm)	25 - 10		
Number of circuits / Thread direction	2.5 turns 1 circuit / Right-hand		
Ball diameter (mm)	4.7625		
Root diameter (mm)	21.0		
Series	GG		GE
Basic dynamic load rating C (N)	16100		
Basic static load rating C0 (N)	33400		
Accuracy grade / Axial clearance symbol	C5 / S	C5 / F	C7 / M
Axial clearance (mm)	0	0.005 or less	0.030 or less
Preload torque (N·cm)	10.0 to 38.0	Up to 6.0	----
Spacer ball	None		
Recirculation system	Tube method		
Wiper	Lip seal		
Lubricant	Alvania Grease S2		

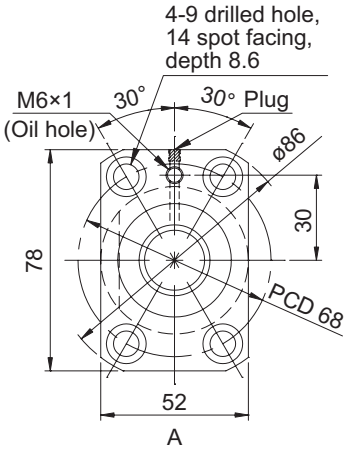

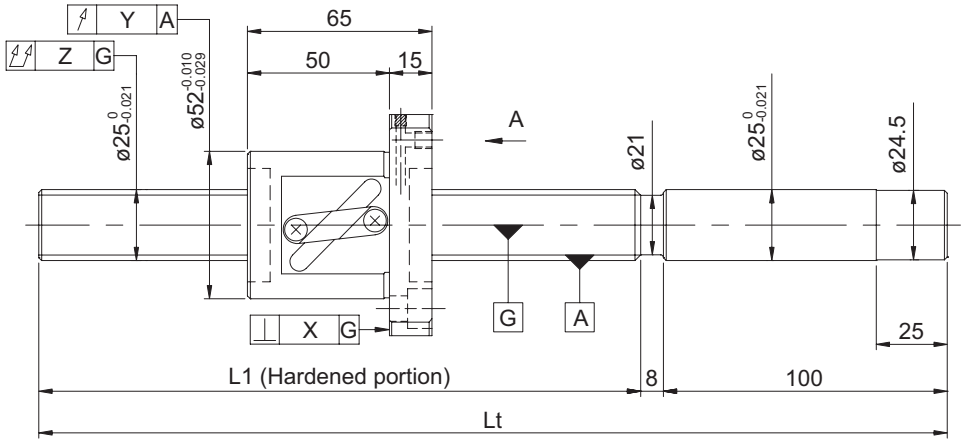

Model No. (Unfinished shaft ends)	Screw shaft length		Maximum stroke (L1 - nut length)	Lead accuracy		
	L1	Lt		$\pm E_c$	e_c	e_{300}
GG2510DS-BALR-1020A	912	1020	847	0.040	0.027	0.018
GG2510DS-BALR-1520A	1412	1520	1347	0.054	0.035	
GE2510DS-BALR-1020A	912	1020	847	0.05/300	----	----
GE2510DS-BALR-1520A	1412	1520	1347			

• Product with axial clearance of 0.005 or less (F) shown may be partially preloaded.
• Preload torque is a value before applying grease.

● Shaft end finish type

Standard precision ball screws are available with KURODA's recommended shaft end finish types for each size.

Other than KURODA's recommended shaft end finish types described below, additional machining including keyways, tapped holes, and D-cut processing are also available if requested. Please contact KURODA with your orders. Model examples for finished shaft ends are described below.

Model example: Unfinished shaft ends (See left figure) → Finished shaft ends

GG2510DS-BALR-1520A → GG2510DS-BALR-1520X1394-C5F
- 1520: Overall screw shaft length
- 1394: Thread length

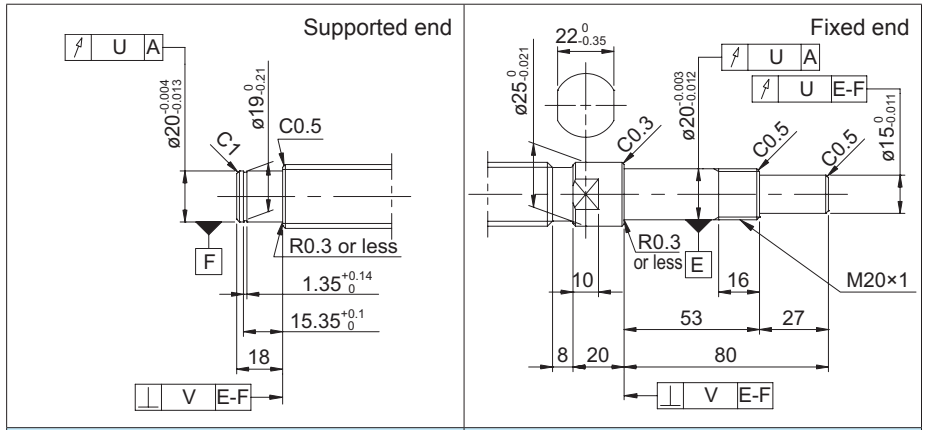

Applicable supported end support unit	Applicable fixed end support unit
BUK-20S (Square type)	BUK-20, BUK-20F (Square type)
BUM-20S (Round type)	BUM-20, BUM-20F (Round type)

● Optional specifications

• Ball screw lubricating unit LUBSEAL can be equipped.

Model example: GG2510DS-BASR-1520X1394-C5F
- S: Wiper material S: LUBSEAL

• Anticorrosive black coating (coating thickness: 1 to 2 μm) is available.

Accuracy of each part					Preload torque (N·cm)		Mass (kg)
X	Y	Z	U	V	Without clearance	With clearance	
0.013	0.019	0.100	0.013	0.005	10.0 to 38.0	Up to 4.0	4.40
		0.130				Up to 6.0	6.08
0.018	0.030	0.150	----	----	----	----	4.40
		0.190					6.08

• At the time of delivery, grease is inserted inside of the nut, with rust-preventive oil also applied. Before and during use, apply lubricant where appropriate.
• For models with lead accuracy grade of C3 or higher and unfinished shaft ends, consult KURODA.